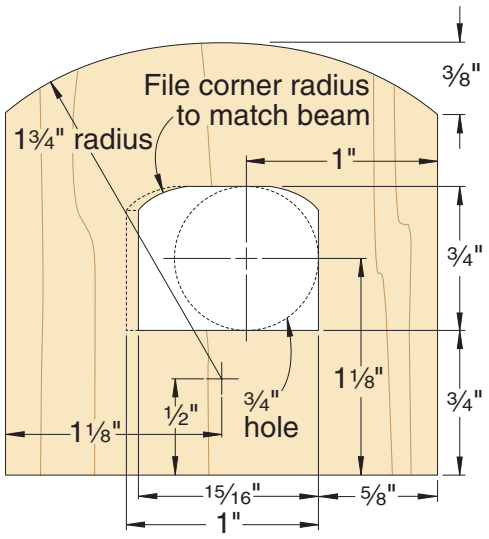

FULL-SIZE FENCE PATTERN

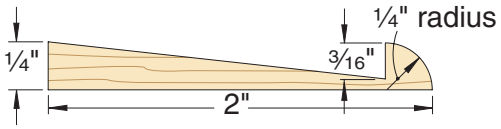

FULL-SIZE WEDGE PATTERN

To ensure full-size patterns are correct size, your printer should be set to print at 100% (not fit to page). Measure full-size patterns to verify size.

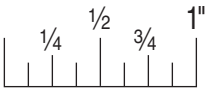

SCALE